Representations and Visual Synthesis in Engineering Design

Joakim Juhl and Hanne Lindegaard

Aalborg University, Copenhagen, Denmark

Abstract

Background Engineers who engage with innovation and design rely on cooperation and knowledge sharing across multiple disciplines. However, the traditional engineering curriculum promotes and emphasizes engineering sciences and monodisciplinary skills and gives less priority to important collaborative skills such as sketching and visualization.

Purpose This article addresses how students engage with engineering design challenges and use visual representations to develop and integrate recognitions. Our study explores how technical, analytical disciplinary competences are combined with those of qualitative, ethnographic user studies.

Design/Method Through a qualitative field study and an analysis of a collection of representations produced during a design process by a team of engineering students, the role of representations in the early stages of collaborative engineering design is explored. After reassembling the representations according to dates and themes, we deployed various perspectives from science and technology studies and engineering studies to assess the students' epistemic journey.

Results Representations not only communicate findings but also incorporate analysis in their creation, and facilitate what we call *collaborative design synthesis*. Successful representations present and organize recognitions so that they are recognizable across other disciplines and can be integrated into new recognitions. Representations therefore shape the collaborative base of the design process and emphasize the important competences that can produce them.

Conclusions The analysis shows that collaborative design synthesis is an epistemology consisting of (1) exploration, (2) inscription, (3) collection, and (4) combining and refining. The important ability of representations to draw together is termed *transferability*, and the competence to produce them, *disciplinary mastery*.

Key words synthesis; representations; collaborative engineering design

Introduction

The visual culture of engineering is one in which people turn to drawings when asked a design question, like the member of a NASA research and design team who was told "better go get the drawings" when he tried to describe a part using gestures and an adding-machine tape. It is more than the collaborative visual thinking of two engineers, so deep in discussion of modifications to their surgical instrument

© 2013 ASEE.
http://wileyonlinelibrary.com/journal/jee
DOI 10.1002/jee.20001

> *design that they sketch together, using one pad of paper and one writing implement, unconsciously passing the pencil back and forth with a coordination suggesting one mind instead of two. The visual culture of engineering is more than the sum of its parts: the practices of sketching and drawing constitute communication in the design world. (Henderson, 1999, p. 25)*

Following Henderson, the role of representations in engineering learning and practice has been considered important for understanding visual craftsmanship and thinking, which are inherent to engineering. This article focuses on the crucial role of representations as mediators in multidisciplinary, collaborative engineering design. In order to improve quality in engineering, engineering researchers, teachers, students, and practitioners need to consider representations as an important key to understanding knowledge generation in collaborative engineering practices. On the basis of a qualitative field study of a student project, we argue that transdisciplinary design is an epistemological process that is best characterized as a multidisciplinary design synthesis. The design synthesis is materialized as representations through four types of activities: exploration, inscription, collection, and combining and refining. We further argue that applying these four activities in teaching and engineering, through working with representations, can improve the capacity to meet transdisciplinary challenges in design processes.

We begin by describing the perspective derived from science and technology studies (STS) on representations and show how this perspective contributes to the discussion of representations in engineering education research. Then we discuss tendencies in the development of engineering disciplines and curricula in relation to representations and transdisciplinary collaborative challenges in engineering design. This review leads to our methodological considerations regarding how we approach the ethnographic case study of the project work of engineering students, in order to learn from their use of representations. We then unfold the case study, which leads to a discussion of the role of representations in the student team's work. The article ends by offering implications for synthesis-oriented teaching, a synthesis-oriented design approach, and engineering education research.

Science and Technology Studies on Representations

The role of representations has been extensively discussed in science and technology studies (STS) starting with the laboratory studies of Latour and Woolgar (1979). By observing scientific practices, they described how visual representations were integral to scientific practice. In opposition to the human-centric perspective on scientific practices offered by prominent sociologists like Thomas Kuhn, STS argues for the importance of the material settings and the central role of things in understanding scientific practices. This position gave rise to the development of actor-network theory and the principle of generalized symmetry (Callon, 1986; Latour, 1986; Law, 1992). The rationale behind this perspective is that differences between human and nonhuman entities are generated in their network of relations and should not therefore be presupposed. Humans and nonhumans are actors that should be empirically and analytically treated equally. The implication of this rationale is that we should see engineers and their nonhuman representations as equally important to understanding engineering practice. From the early 1990s, interest in representations expanded to engineering studies and engineering design research (Bucciarelli,

1994; Henderson, 1991, 1995, 1999; Carlile, 2002). Within engineering, the role of representations became strongly linked to collaborative challenges between different engineering disciplines in engineering design. More recently, the role of representations has been addressed within engineering education research (Johri & Olds, 2011) and (Johri & Lohani, 2011). Based on ethnographic methods, STS has approached professional practices by following the transformation of documentation as it moved around in organizational settings such as those at Boeing, BP, CISCO, Ford, IBM, NASA, and Statoil (Henderson, 1991, 1995, 1999; Carlile, 2002).

Closely following representations as nonhuman actors that are integral to work practices thus introduced a perspective that both illuminated discipline-specific roles of representations and the transdisciplinary knowledge transfer realized through cascades of transformations of the representations in and between different engineering practices. An interesting outcome of STS was the finding that epistemological, political, sociological, and professional questions merged into one question, the answer to which was to be found in understanding the practices that build on and are tied together by repre-sentations.

Science and technology studies contributes to engineering education research by situating representations as integral to the practices that produce them, build on them, and reproduce them, by providing methodologies and a ranges of methods for studying and learning from these particular practices. STS thereby offers a range of questions that guide engineering education research by focusing on the important heterogeneous and complex relationships between humans and things in engineering to better understand its practices.

Engineering studies since the 1990s have pointed out that the highly specialized knowledge in the professions they studied was strongly linked to the visual representations that the practitioners worked with. The studies also showed these representations to be highly codified and specific to the practice they were used in. The specific codification in each profession thus contributed to the inaccessibility of their representations for practitioners outside their practice (Bucciarelli, 1994). Henderson (1991, 1995, 1999) and later Carlile (2002) both recognized the mediating ability of certain visual representations as carriers of codified knowledge across different knowledge domains.

Henderson termed the ability of these visual representations *meta-indexicality* because they "serve as a meeting ground for different kinds of knowledge" (Henderson, 1999). Meta-indexicality is, according to Henderson, the ability of visual representations to combine many diverse levels of knowledge and thereby serve as a meeting ground for many types of practitioners. To Henderson meta-indexicality refers both to the ability of visual representations to contain different levels and types of codified knowledge and to the collaborative role of visual representations to enable practitioners with different kinds of knowledge to meet and negotiate.

Carlile focused on knowledge transfer between different disciplinary practices facilitated through material objects, for which he, like Star and Griesemer (1989), used the notion "boundary objects." For Star and Griesemer, boundary objects are shared and shareable across problem-solving disciplines, where they work to establish a shared context that "sits in the middle" (Star, 1989).

In adapting the boundary object concept, Carlile focused on the characteristics that make them effective across what he introduces as syntactic, semantic, and pragmatic knowledge boundaries (2002). He argued that "first, a boundary object establishes a shared syntax or language for individuals to present their knowledge" (p. 451). In design and innovation, Carlile argued that a syntactic knowledge transfer is insufficient to handle

the novelty that arises at the more complex knowledge boundary. This boundary is overcome when, as Carlile stated, "an effective boundary object at a semantic boundary provides a concrete means for individuals to specify and learn about their differences and dependencies across a given boundary" (p. 452). According to Carlile, these differences and dependencies often result in negative consequences that must be resolved. These negative consequences are resolved when, according to Carlile, "at a pragmatic boundary an effective boundary object facilitates a process where individuals can jointly transform their knowledge" (p. 452). A negative consequence can occur when involved practitioners alter, negotiate, or change their hard-won knowledge by, for instance, changing the object or representation used.

Though Carlile and Henderson focused on important aspects of how representations contribute to collaborative engineering design, neither approached how such representations are produced.

Development of Engineering Disciplines and Curricula

Since World War II, the atomic bomb, and the moon landing, both European and American engineering education has tended to adhere to the natural sciences and develop in increasingly more science-oriented directions (Kline, 1994; Seely, 2000). Historians of technology and science have characterized this tendency as technological determinism (Smith & Marx, 1994). Within science education, four waves of reform over the last half century have been identified by Pea and Collins (2008) starting with the post-Sputnik wave of the 1950s and 1960s (Johri & Olds, 2011). As a consequence, the curricula in most engineering schools have developed a core of scientific courses that to a great extent determine the educational profiles and competences of engineering students (Jørgensen & Valderrama, 2012).

Various representations are used in engineering science courses as part of their curricula and as integral parts of teaching methods. A search for the various published usages of the term *representations* in this *Journal* revealed that its dominant use is to describe means for communicating research results such as experimental data (e.g., Mehalik & Schunn, 2006). This narrow usage of representations as a means for communicating finalized research results implies that the role of representations can be separated from the epistemic process of achieving the outcomes they represent. In this view, representations communicate only the outcomes of knowledge production rather than its intermediate steps (e.g., Suthers & Hundhausen, 2001).

In current engineering education curricula, the tendency is to produce still more codified and discipline-specific representations, thus making the results derived through these engineering disciplinary curricula less accessible outside of the particular disciplinary practice. This tendency is problematic due to the different nature of discipline-specific scientific work and the work that applies many kinds of scientific knowledge in designing. Schön (1987) explains the nature of designing:

> Designing, in its broader sense involves complexity and synthesis. In contrast to analysts or critics, designers put things together and bring new things into being, dealing in the process with many variables and constraints, some initially known and some discovered through designing. Almost always, designers' moves have consequences other than those intended for them (pp. 41–42).

Whereas the natural and technical scientific content of engineering curricula is improving, it can be argued it is at the cost of engineering students' competences to apply that

scientific knowledge in design and product development. Carlile (2002) points to the limiting consequences: "If an individual cannot transform the current approach to a cross-functional problem, their knowledge will have very limited impact in a product's development" (p. 452).

While specialized scientific representations define and communicate specific problems within a particular field of research, their applicability beyond that field is often limited. This article will therefore treat representations that are made and used in engineering design to explore how representations can be understood to support a collaborative synthesis in drawing together recognitions produced through different disciplinary competences or expertise.

Methodological Considerations for Studying Representations

Building on the situational perspective outlined in this *Journal* by Case and Light (2011) to cover the range of methodologies that differ from positivism, which all focus on producing understandings of particular situations and experiences, this article is based on a qualitative field study. The team work performed by engineering students during their redesign project course provides an example of collaborative use of representations in engineering. As briefly discussed above, representations have been described as a meeting ground for diverse levels of knowledge and practitioners (Henderson, 1999) and in their role as boundary objects in facilitating knowledge transfer across disciplines (Carlile, 2002). Despite this attention, the process by which representations serve these functions has not yet been systematically investigated.

By closely studying the representations the team used to realize their project, this ethnographic case study offers insight into the generation of representations and their role in a collaborative engineering process. This article's contribution to the literature is a more detailed understanding of the particular social and material circumstances under which representations are produced. This article adopts a situative learning perspective, as outlined by Greeno, Collins, and Resnick (1996), meaning that the concept of knowledge is understood to be distributed among people and their material environments, including objects, artifacts, tools, and books. This perspective resonates with Hutchins' (1995) ethnographic work on what he calls naturally situated and culturally distributed cognition, where he draws on the anthropological tradition in his contribution to cognitive psychology.

The theoretical and epistemological outset for this article's exploration and interpretation of representations is the idea that cognition is distributed and situated in the settings where people and objects produce and reproduce recognitions. From an STS perspective, the notion of cognition is therefore inseparable from the things through which we produce recognitions such as representations. Therefore, realizing is a phenomenon that is equally mental, material, and social. This idea of cognition builds on the underlying ontological principle that recognitions are embedded into their particular local, historical, and social settings. Opposed to the positivist and postpositivist ideal of true recognitions, which are generalizable and therefore freed from the historical and local settings and practices that produce them, our epistemological premise is that recognitions are realized and empowered through historical, local, social, and material practices (Latour, 1988). Inspired by Latour, we see representations as integral to distributed cognitive processes, whereas the positivist view widely deployed elsewhere in this *Journal* divides representations from the phenomena and the perceptions they represent.

The philosophical basis of our perspective on representations has been outlined by Latour (1999) through his ethnography on what he terms *circulating reference*. Circulating reference presents scientific practice as building long cascades of references, opposed to Descartes' view of science as being the construction of a thin and risky correspondence between the world and the mind as two separate domains (Latour, 1999). The fundamental difference between the views of Descartes and Latour on science is that Descartes builds on the ontological premise of separate domains for things and thoughts, whereas Latour promotes an interpretation of things and thoughts as inseparable from each other. The epistemological difference between these two views is that where Descartes take as the origin for interpretation two finite end points, that of the real (world) phenomenon and that of the (mind) representation of that phenomenon, Latour investigates the phenomenon of scientific practice as building cascades of translations starting from the middle and connecting the two potentially infinitely expanding extremes of data and representation through scientific references. The major advantage of Latour's view over Descartes' is that through Latour's concept of circulating reference we can see each representation in the long cascades of scientific references as equally material, important, and real as the phenomenon that it represents. The representation affords actual presence to the phenomenon in the collaborative and cognitive practice, whether that is in natural science or in professional engineering practices. In this perspective, each representation is both a result of the previous process and the basis and working condition for the process to follow. This philosophical principle stresses an understanding that representations not only communicate recognitions but also materialize, preserve, and facilitate the intermediate steps in knowledge production.

Selection and Development of Methods

The choice of methods to study and describe the roles of representations is based on the methods' abilities to grasp the particular, local, social, and material settings in which the collaborative cognition that the representations are part of is distributed. A method must also present the empirical material so that the intermediate steps of the studied knowledge production can be outlined in a process perspective.

The specific student project for the empirical analysis was chosen because it was representative of the more than 40 similar redesign projects that have been conducted over the 10 years the course has been taught in the design and innovation engineering education in Denmark. The project executed by the design and innovation students was carried out during their second semester, spring 2004; the second author tutored the team and taught the project course from 2003 to 2012.*

Three thorough reports with comprehensive appendixes were handed in by each team during the course; the reports supported the onsite observations of the design process

*The first author has lectured in, and supervised on a weekly basis, the redesign course throughout its 10 years of existence and through more than 16 weeks on the team project described in this article. Besides teaching several courses in design and innovation education, the second author has supervised many of the project team members in other projects and functioned as coordinator at the master's level of design and innovation. The first author, a doctoral candidate in design and innovation, completed the redesign course in spring 2005, and has taught several design and innovation courses after graduation.

with extensive written and visual material. The narrative of the students' project is based on material from the three reports and appendixes. The main source of data is the first report handed in by the students, which covered the explorative part of the project and provided an organized collection of the empirical material they produced. The students deployed the worksheet technique (Hansen, 1999, 2000) to make dated, written, and sketched accounts of their observations and findings.

As part of the second author's supervision of the students' redesign project in 2004, notes documented their discussions and work progress throughout the course. To visually present and situate the work during redesign courses, photographic material was collected in spring 2011.

To assess the process through which the students produced accounts of their observations, we reconstructed the timeline of their representations. Reconstructing the timeline made it possible to see which representations were produced before others. Throughout the project, the design and innovation students displayed their worksheets on a wall as they produced them. This method enabled the students to see most, and access all, of the worksheets that they had produced and collated throughout their project. Fundamental for understanding the process of the students, this method has also enabled us to keep track of the collated bulk of representations and see how additional representations related to the existing ones. The documentation method and working style of the students has equipped us with substantial empirical input to assess how the students translated their inputs into new representations and thus new recognitions (Latour, 1987).

To analyze the representations made by the students, we take inspiration from Jay Lemke's (1998) analytical framework about ways that verbal and visual-graphical media combine. Lemke differentiates between presentational, orientational, and organizational ways to make meaning as three distinct, generalized semiotic functions. These functions help us differentiate between how the students – through their visual representations and by means of their representations' components – present what they work with, how they orient to that presentational construct, and how they organize the presentational construct in relation to other elements. We apply Lemke's framework to analyze how student representations successively develop in terms of what they visually include in their presentation, how they orient to it, and how they organize it in relation to other elements.

The Design and Innovation Program – Project-Based Learning

The student project that serves as an empirical case was carried out as part of the design and innovation (D&I) engineering program that was developed in 2002 at a large technical university in Denmark. The goal of the D&I program is to produce engineers with a new expertise that is better adapted to deal with the complex and multiple tasks of product development and engineering design in professional organizations. The curricular approach seen in Figure 1 achieves such competences by deviating from conventional engineering programs by combining three disciplines of expertise, which are represented almost equally in the curriculum: natural and technical sciences, design synthesis, and an innovative sociotechnical analysis. Combining the curriculum with integration and coordination of multiple disciplines and with a series of design projects that provide progressive challenges to the students' learning, the program represents a radical innovation within engineering curricula (Boelskifte et al., 2011).

Working on projects in teams is integral to the D&I teaching approach. Team projects are used in most courses to develop student competences in utilizing expertise on

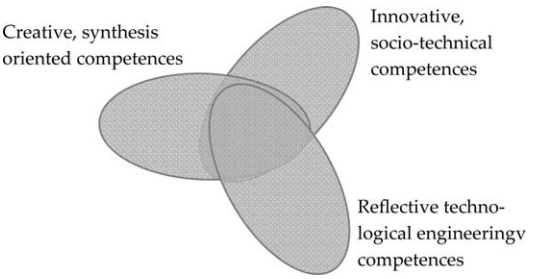

Figure 1 Graphical illustration of the design and innovation engineering education's curricular composition.

problems through a collaborative effort. The material settings in which the program is realized are therefore central to facilitate teamwork and project-based learning. Each class in the bachelor's part of the program is equipped with its own classroom in which the students have small team studios and receive most of their lectures.

The first semester in the D&I program includes courses in mechanics and materials, product design, user analysis, and visual communication. In the visual communication course, the students acquire such basic individual skills as sketching, technical drawing, and layout. During courses, lectures are combined with exercises and tutoring. To develop and allow students to practice their skills, the semesters culminate in design projects, in which the students apply and combine the tools and techniques they have acquired in their visual and communication coursework. These visualization techniques provide the visual content for the worksheets that were a major empirical source for this article. In the design projects, the students apply their newly acquired skills in a collaborative team effort where their design ideas have to be visualized and then evaluated. In the curricula of the first and second semesters, students use drawing techniques and discover how these are useful in generating and communicating ideas in a collaborative design process.

The Product Analysis and Redesign Course

In the second-semester product analysis and redesign course, the students receive a physical product from a company. The students must first analyze and then make a redesign proposal for the product. Combining various approaches, in the analysis the students must account for the product's functionality, its properties, its construction and production, and its socio-material context (e.g., users, usage, producer, sales, competition, regulations, and culture). The course is conducted in collaboration with companies that donate the products to be redesigned. Each team's resulting product is a redesign of a conceptual proposal of the physical product.

The course is based on an empirical approach where the students unfold both the external and the internal networks of the product. To explore the external network of the product, the students conduct field studies to make firsthand observations of situations in which the product is used. In Figure 2 a student draws a rowing kayaker to capture that use scenario of a kayak. Drawing is a visual documentation technique where students process and analyze their observations. Making a representation that documents an observation produces a stronger relation between the observer and the observation and enables others to relate to the content of the representation. It is crucial that the students understand the practices in which

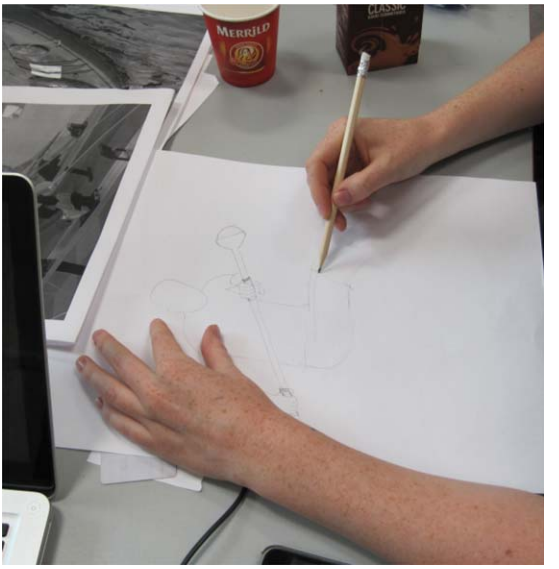

Figure 2 An engineering student in the design studio June 2011 drawing a kayaker. [Color figure can be viewed in the online issue.]

the products are embedded and how users interact with the product. Typically the students learn how to use the products themselves by using them in use scenarios to achieve a more embodied perception of the user perspective. Applying an explorative method called "roll the snow ball" (Bijker, 1995), also known as snowball sampling, the students use informants to locate new informants whose perspectives present additional dimensions to the students' understanding of the product. In the students' documentation of the product's external network, they clarify a broad variety of dimensions, such as organizational, economic, use patterns and scenarios, ergonomics, safety, reliability, and service issues.

The internal network analysis of the product is an empirical approach where the students dismantle the product and account for its constituent components, how subfunctions of those parts support the function of the product, and how the parts were produced. The internal and external perspectives on the product produce an analysis that accounts for the product's context, usage, function, and production dimensions. Documenting all types of observations and ideas on worksheets, the students integrate all perspectives into a range of solution concepts with potential to improve the product. The students learn that redesigning produces solutions that incorporate a complete and multidimensional assessment of the product.

As a method that is central to the course, the worksheet technique enables the students to materialize their observations and ideas by sketching and adding pictures and descriptions to the worksheets. In Figure 3 students face their collection of worksheets during a team meeting. The students organize and share their knowledge by assembling their worksheets for display on the blackboard. Beneath the line-up of worksheets, blue lines and writings thematically organize the worksheets according to their content and intended use. Throughout projects, the students exchange and rearrange the worksheets according to how they can support the meanings they find relevant to their project. These meanings

Figure 3 A team of students discussing the state of their different conceptual redesign proposals in the design studio June 2011. [Color figure can be viewed in the online issue.]

are often presented, discussed, and modified through meetings such as the one shown in Figure 3. We can also see worksheets on the table, which the students sit around. These worksheets are either in the making, taken down from the blackboard to be the center of a discussion, or being exchanged with new worksheets. The surfaces of the blackboard and the table serve tasks analogous, respectively, to those of a computer's hard disk and RAM. On the blackboard we see a neatly sorted "hard disk" with easily accessible "files" documenting the accumulated work of the team. On the "RAM" of the table we see the ongoing processing of worksheets in multiple simultaneous work processes.

The worksheets form a standardized frame in which diverse types of observations, considerations, solutions, experiments, and decisions can be documented and shared throughout the design process. The worksheets thus perform two important tasks. First, the worksheets are an information infrastructure by making the individual work collective because worksheets are displayed in the team's studio, which enables the students to share knowledge and form a common ground as the team inhabits the studio with visually displayed information about their project. Second, the worksheets form a comprehensive appendix that supports the reports that the students hand in during the course.

Drawing Representations Together

This analysis is based on the representations that a team of engineering students produced to capture empirical observations and ideas during their redesign project. Assessing the documentation produced by the team during the course, we found a new way to value representations as materializing ideas, observations, thoughts, and the design process. Our interest in these representations is twofold: As research objects, they are the primary empirical source about the team and its process; at the same time, they are the objects we seek to understand through the analysis.

To capture the successive progress of the design synthesis that the students undertake through their project, the description of their work process is guided by a thematic structure that underpins the various aspects of the project's development. We commence our

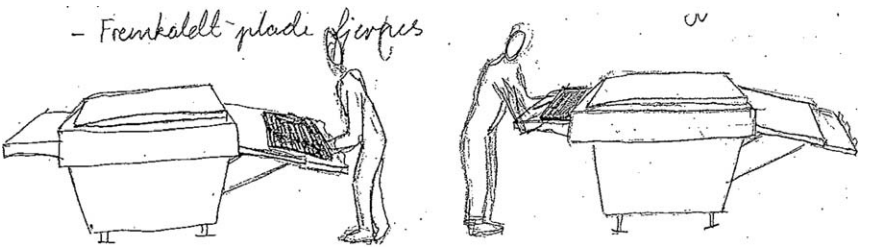

Figure 4 Early drawing presenting the assigned product, a plate developing machine and an operator. The Danish text reads, "Developed plate is removed."

description of the students' work at the point in time when they initiate their project with the task that is central to most work with a scientific heritage: the empirical activities of gathering and documenting observations. The succeeding stages of the students' work are dealt with chronologically and capture how they produce, organize, and reproduce representations in their collaborative effort to learn about the product they have been assigned. Our journey through the students' project culminates as the design synthesis materializes into a refined representation that collects, combines, and refines their accumulated recognitions into a strong account about how to redesign the machine they have studied throughout the project.

Observing, Drawing, and Inscribing

The redesign course began with the formation of teams and the assignment of products to be redesigned. One of the first team activities was a visit to the distributor of the product in order to obtain a basic understanding of the product and its usage. Figure 4 is an early representation that in a small sequence of two operational stages shows the photographic plate developing machine that the team has been assigned. Placing an operator in front of the product in the left representation provides proportional cues and gives an impression of how the product is operated.

By entering the field, each team member starts to develop a tacit understanding of the product and the context of its operation and use. This is an important aspect in any design process. The designer's conception of what she is working with is decisive for her ability to understand the problems and thereby also potential solutions. As part of the learning process, the students captured their observations on worksheets as drawings, notes, or descriptions. Figures 4 and 5 are some of the team's first sketches, which were made mostly within one week after the field study.

The sketches show that the students have captured some of the basic uses of the product by illustrating how machine and operators interact in different use scenarios. In the team's studio, these sketches were hung on a wall as worksheets and thereby drawn together, collecting the observations made by all the team members. Figures 5a and b deploy a similar presentation of the product as in Figure 4. Varying the placement of the operator and the operator–product interface, the images orient the viewer to different usability features of the product. Together the representations document a collection of the product's use scenarios.

Figures 5c and d alter the orientation of the product and provide a more three-dimensional arrangement of use scenarios. This viewing angle together with the increased size of the sketch in Figure 5d also displays a deeper level of details about the product's features, postures of the operators, and the product–operator interaction. Each

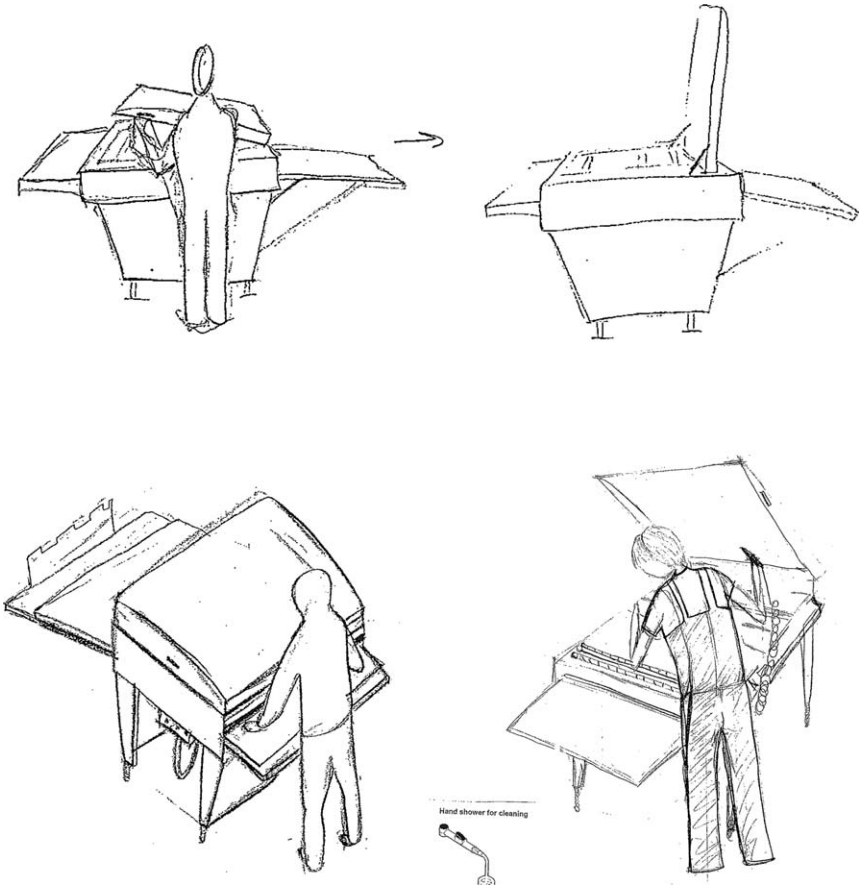

Figure 5 (a–d; clockwise from upper left). Early representations of the plate-developing machine and its use scenarios. The sketches are made within a week from the students' first encounter with the product.

representation thus serves as a materialized interpretation of what individual team members have observed. In other words, they are inscriptions that transcend the boundaries of the individuals and become elements in the team's collaborative thinking.

By applying their drawing skills in order to capture their observations on worksheets, the students created what Latour calls *inscriptions*, which refer to "all the types of transformations through which an entity becomes materialized into a sign, an archive, a document, a piece of paper, a trace" (Latour, 1999, p. 306).

Collecting Representations and Inscriptions

As we see in the representations in this article, the team members could similarly observe all the drawn representations, each of which portrayed unique and particular interpretations of observations on use situations. When presented on the same wall, these representations collectively created a more comprehensive picture of what the team was about to redesign.

The practice of collecting empirical observations and making them combinable and able to travel across space and time was described in "Visualization and Cognition: Drawing Things Together" (Latour, 1985). Here, Latour builds on Eisenstein's explanation of how the Danish astronomer Tycho Brahe was able to make his great discoveries. According to Eisenstein, Brahe made his discoveries not because he was physically closer than his predecessors to the phenomena he observed, but because he was one of the first to have access to all observations and predictions made by his predecessors, in a language or code he mastered and collected in the same place:

> It was not because he gazed at night skies instead of at old books that Tycho Brahe differed from stargazers of the past. Nor do I think it was because he cared more for "stubborn facts" and precise measurement than had the Alexandrians or the Arabs. But he did have at his disposal, as few had before him, two separate sets of computations based on two different theories, compiled several centuries apart which he could compare with each other (Eisenstein, 1979, p. 624).

The point that Latour bases on Eisenstein's work – and which we apply as an interpretative principle on the teamwork of the students – is the generative effect of creating and collecting visual representations in cognition and epistemology. While preserving and accumulating observations and ideas are seen as a central principle in the realization of many great discoveries throughout history, we introduce this principle to the small-scale discovery realized by engineering students in a project course.

The preserving ability of representations that enables the inscriptions they contain to travel across space and time is also central to the representations we observe in the students' design process. By drawing what they see and think, the students capture and preserve their observations on paper so that they can collect and combine their representations by displaying them on the studio's walls or bulletin boards. With the notion of "immutable mobiles," Latour (1985) emphasizes the ability and role of visual representations to be carriers of experiences and knowledge across space and time, and thus to facilitate epistemic processes. On a smaller scale, the role of the representations that we observe in the students' design process facilitates their ability to produce and combine inscriptions through drawings.

When the students draw their observations on paper and display them on the wall in their studio, they do more than document research. They constantly build a more comprehensive and collective understanding through collecting immutable mobiles for display on flat surfaces in their studio. The students' project is a learning process through which what they realize is inseparably cognitive, material, and collective. As the students inscribe and collect their findings, they simultaneously realize their analysis and commence what we propose is a design synthesis.

Inscribing differences To report their observations, the team has to develop ways to illustrate them. The students thus start to develop representations that can communicate what they realize from their observations. By drawing, the students inscribe certain aspects of use scenarios or technical issues that they have observed and want to preserve. The craftsmanship necessary to project observations onto a two-dimensional surface is an important skill for making elements from observations into inscriptions that are accessible for others. Through the flat projection on paper, thoughts are materialized and an important step towards synthesis is realized.

The importance of the materialization process is twofold. First, it is an approach to thinking with the hands by materializing thoughts into drawings; it is thus a practice of realizing thoughts. The drawings are inseparable from the thoughts, just as the practice of drawing is

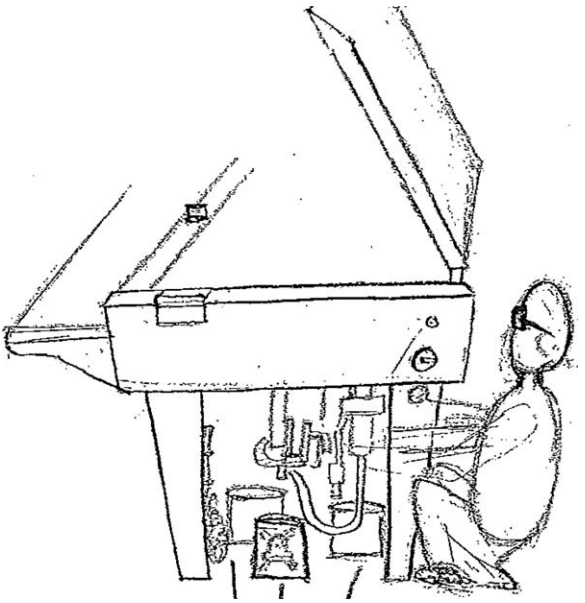

Figure 6 Drawing produced after the team conducted further examination of the product.

inseparable from the craftsmanship of thinking. "'Thinking is hand-work', as Heidegger said, but what is in the hands are inscriptions" (Latour, 1985, p. 19). What are in the hands of the students are paper, pencils, and drawings. The second, and equally important, aspect of the materialization process derives from the first. Transforming thoughts into visual representations makes them accessible to others and thus shareable. The activity of drawing translates individual cognitions into a process of collective re-cognition.

In *Designing Engineers*, Bucciarelli (1994) develops the term *object worlds* to describe how engineers see and reason through the material objects that surround their professional practice. He describes, for instance, how a specialist working with solar cells reads the path of the sun over the sky by using a curved graph that relates current and voltage during a cloudless day. Along the same line of thinking, the students build around them their specialized world, inhabited by sketches, drawings, and notes, which relate them to what they are to redesign. The students' design project is in fact their evolving collection of representations documenting their work that hangs on the walls in their studio.

The wall of representations plays a growing part in the formation of common ground among the team members as their design process unfolds. As we all notice things differently and even see the same things in different ways, the team members also have different things to express through their drawings. While some of the representations in Figures 4 and 5 show different body positions and product-user operations from different angles, other representations in Figures 6 and 7 add technical elements to supplement meanings derived from the technical analysis of the product.

Although this team of engineering students has taken the same courses and had similar experience with design, their representations express different perceptions of their observations. Figures 6 and 7 are examples of the interpretative outcome of studying the internal

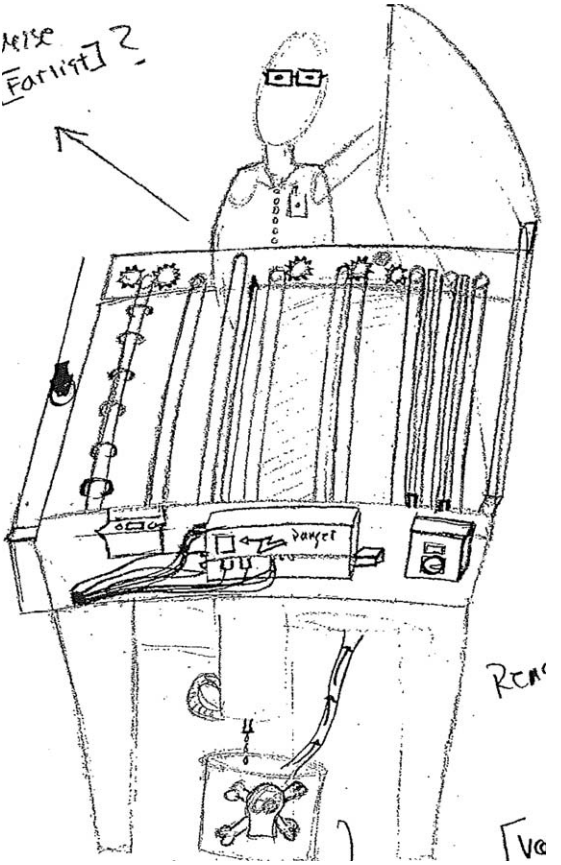

Figure 7 The skull symbol emphasise safety-usage issues of the product.

network of the product. Having the product in the design studio and dismantling it to explore its technical construction is a very different exercise than the usability studies documented in Figures 4 and 5. Figures 6 and 7 show us technical and functional details such as the tubes and valves inside and beneath the product that transport different liquids around inside the product. Some of these liquids are supplied with a skull symbol to indicate that they are toxic. Including users in these presentations orients attention to the dangerous use scenarios inherent to maintaining the product.

The inclusion of technical details, toxic symbols, and users supports Henderson's concept of meta-indexicality (1999) for the capability of visual representations to present and combine many diverse levels of knowledge. Already at this early stage only two weeks into the project, the representations of the students can be understood to serve as a meeting ground for different kinds of recognitions that are derived through different disciplines. At a yet very early stage, the students manage to inscribe meanings from both the discipline of usability studies with meanings from the technical discipline of dismantling and making functional analysis.

In relation to Carlile's analysis of boundary objects (2002), the students can be understood to use the ability of material objects to facilitate cross-disciplinary knowledge transfer. The diversity of meanings that the students inscribe suggests that they operate at a semantic knowledge boundary. As we can see in their sketches, the students are challenged by collectively handling novelty. While the students share the syntactic basis in language, symbols, and presentation style, their drawings reveal what Carlile defines as sematic knowledge boundary issues by realizing different perceptions and interpretations of the observed object. The interesting aspect is how these semantic differences between the interpretations of the presented object represent a potential that is realized through the way representation styles and inscriptions are combined and reproduced in later representations. The combinations cause what Carlile (2002) suggests is a transformation of existing knowledge into new knowledge and what Latour (1987) describes as cycles of accumulation. The epistemic development in the students' work, discussed by Carlile and Latour each in their own way, is what we term a design synthesis.

We suggest that to interpret the specific capability of certain representations to enable transformation of knowledge (Carlile) through the epistemic principle of cycles of accumulation (Latour) in order to understand how the students achieve design synthesis is realized through representations.

The illustration in Figure 8 is dated three weeks after the first field trip. This worksheet supplements the prior drawings by representing a greater collection of subfunctions with more detail. Together with written notes, this representation collects and rearranges the technical safety functions of the product. By enlarging each detail and organizing them so that their individual placement on the product is inscribed, the representation produces an overview of how the product's multiple safety functionalities are placed in reference to the product's architecture and how these are accessible for operators.

Integrating the technical safety functions with an operator-representation, this representation synthesizes the technical domain knowledge derived from the functionality analysis with domain knowledge from qualitative ethnographic observations into a new recognition that relates the product's usability with its safety functionality.

As the students inscribe more detail into the representations, they create a better overview by collecting and combining additional inscriptions on the same piece of paper.

Later worksheets (Figure 9) add more use practices, making the ensemble of representations more comprehensive. An interesting tendency seems to emerge when looking at these drawings in relation to the earlier drawings (Figures 4 to 8). The variation seen among the former drawings is reduced, and the particular way in which the machine and users are represented is reproduced and normalized. The orientation of the product has now been stabilized at a specific viewing angle in comparison to the prior presentations. Having a collection of worksheets presenting the product from the same angle produces a sequential effect of the various stages and levels of usages, which makes them more apparent. The text in combination with the drawings shows how the operator in exposed positions manages the heavy racks. The representations thus present and inscribe an awareness of health and safety problems. At this stage, we observe an agreement among the students about representation style, whereby the product is portrayed in a certain perspective and with one user to illustrate a specific use situation. We see the generative effect of this normalization in representation style in the following.

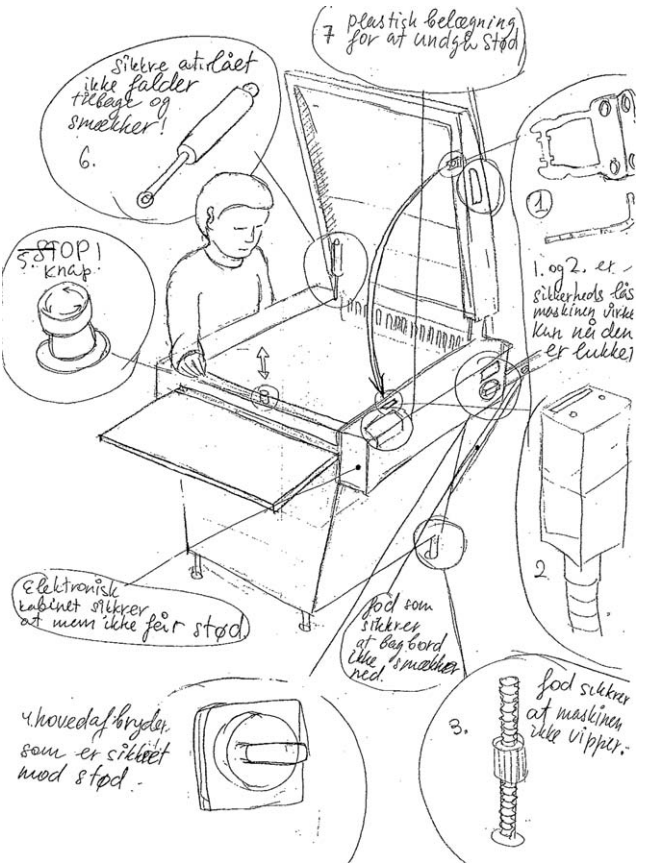

Figure 8 Representation that radically differs from the prior presentations in presenting a far greater variety of subfunctions.

Making Combinable Representations

Dismantling and examining the product that is to be redesigned is one of the important design process activities. An explicit reason for this hands-on work is to make a functionality description of how the product works and how it is put together.

Figure 10 shows an early representation of how the team accounted for the functionality description of their product. Dismantling and describing the functionality of the product and its parts is a process whereby the students realize how the different subfunctions support the product's overall functionality, and how they are implemented in the product architecture.

Presenting the functionality of the plate-developing machine as a simple, flat two-dimensional block diagram, the representation in Figure 10 illustrates the collection of parts that support the machine's regulated flow of photographic developer fluid. What is inscribed into this representation is recognition of how the fluid flows in a selected collection of parts in the product. Drawing the representation of the fluid transportation

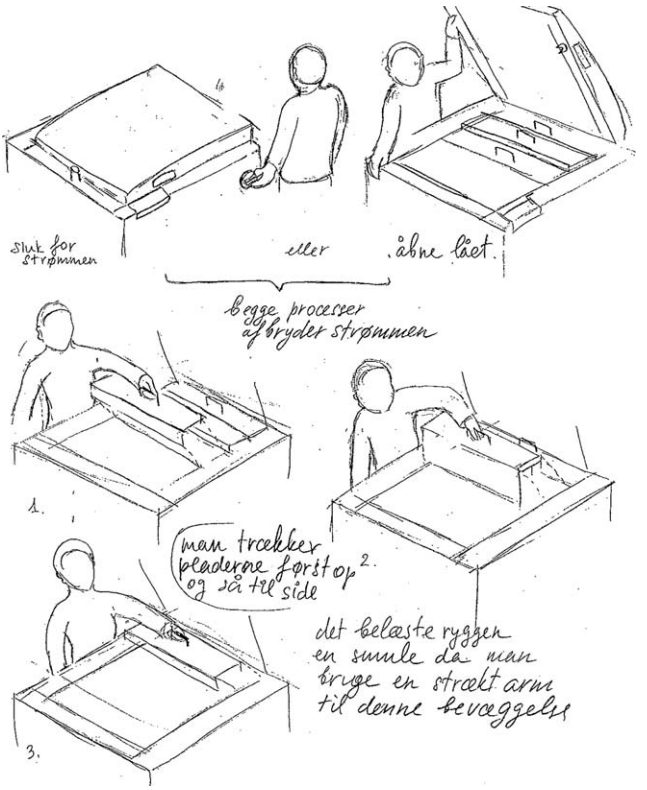

Figure 9 This worksheet presents more use scenarios based on further user observations. The two illustrations at the top are about disconnecting power. The three following illustrations show how the developer plates are removed and explain the related ergonomic problems.

system as a reduced abstraction that does not visually resemble the physical parts of the machine, serves to produce a simplified presentation of the photographic developer fluid system that amplifies its working principle.

These hands-on activities and observations led the team to produce a variety of representations to account for the functionality of the product. The two later representations (Figures 11a and b) both carry inscriptions of the same function as in Figure 10, but in a different way. Although at first glance they look alike, they are different reductions (Latour, 1987, 1999) of what they represent, which enables them to emphasize different features in the product's functionality. The representation at the lower left (Figure 11a) shows the parts of the machine that contain and distribute the finisher fluid, while the representation to the right (Figure 11b) shows the same, but for the developer fluid.

What is visually different in these representations, in relation to the earlier flat representation in Figure 10, is the addition of a third spatial dimension. This three-dimensionality helps relate the presented subfunctions to the product's internal architecture. Together with the similar scaling and viewing angle of the two representations, the

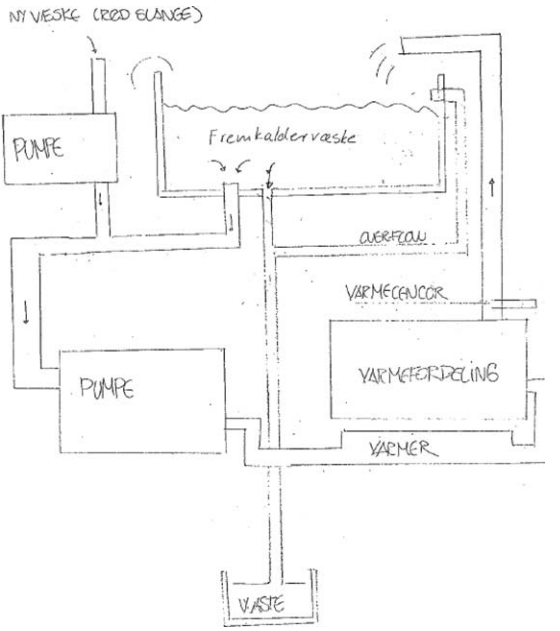

Figure 10 An early block diagram representation of the product's functionality.

exposed internal architecture of the product makes the representations and their content juxtaposable. An important capbility of immutable mobiles is their scalability (Latour, 1985), which these drawings illustrate. Manipulating the scale can be used to zoom and align representations, which we will see is a very useful capability when their inscriptions are to be transferred and combined into new representations.

Combining and Refining into Synthesized Representations

When the students approached the first milestone in the design course, their team had to write a report that summarized the useful information they had gathered about their product and how the product could be improved. This task meant that the worksheets produced by the team during seven weeks' work had to be gathered and organized in an appendix to supplement the content of the report. Figure 12 is a product of this organizing process, where many new worksheets were produced.

It is important to note that this illustration combines many of the prior representations, as well as reproduces a certain way of illustrating the product and its usage. In this combined representation, things are certainly drawn together. Preceding this representation, different use situations had been observed and inscribed into representations that were collected and juxtaposed on a flat surface of a wall or on a table in the design studio. These use-situation inscriptions were then combined when drawn together to make the refined representation we can see in Figure 12. Traces of this socially and materially distributed cognitive process are seen in the almost impossible number of different simultaneously occurring use situations being represented in Figure 12. The representation in Figure 12 is therefore not a truthful presentation of how the product's usage typically

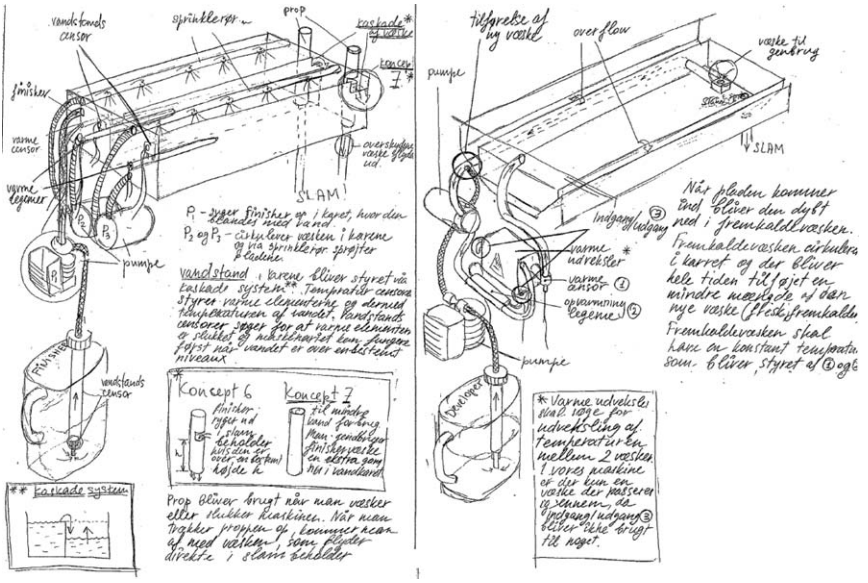

Figure 11 Later 3-D representation of the product's fluid distribution systems; finisher fluid (a, left) and developer fluid (b, right).

takes place, but an interpretation that is based on the combination of numerous observations and recognizes the product's multiple operational configurations. The accuracy is not the point in this representation; on the other hand, the message is.

Combining prior representations into a new and more comprehensive one clearly shows how the product has to be operated from four sides. This result stresses the product's demands on room placement, which its four freely accessible sides require. The representation thus makes a strong point about the potential improvement in the product's room-placement demands. This refined representation also features important inscriptions of the product's internal architectural construction. These inscriptions are made visible by making one user and one surface transparent in order to illustrate the developer and finisher fluid tanks, and to reveal their otherwise hidden placement inside the product.

The inscriptions integrated in the representation in Figure 12 visually combine recognitions from the hands-on dismantling and technical functionality analysis of the product with recognitions from the usability and user studies. The production of this representation has thus drawn together technical disciplinary expertise in functionality analysis with ethnographic expertise in user studies. Drawing together recognitions from these two areas of expertise on the same piece of paper, not only illustrates the product's problematic room-placement demands, but also reveals the technical consequences of altering the product's architecture. Juxtaposing these two different areas of expertise does more than reveal their respective recognitions on the same piece of paper as just a patchwork. Having these two sets of recognitions visually presented side by side in a compatible format provides novel refined recognitions that are synthesized products of these two otherwise separate sets of recognitions. Before the students knew about the product's different operational and room-placement problems, the students also knew

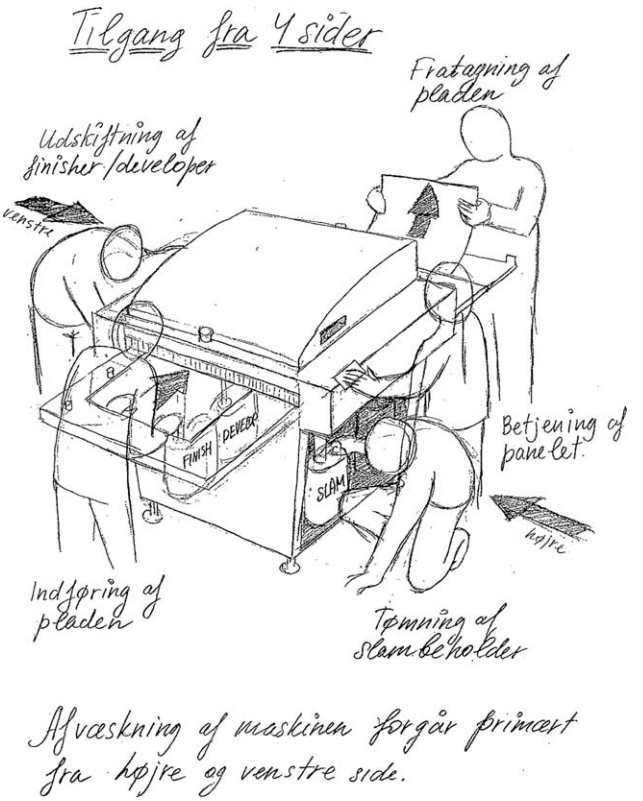

Figure 12 This representation is a product of an organizing process, where new worksheets were produced. Drawing together prior recognitions from both the technical analysis and the usability studies, this representation presents a collection of components combining inscriptions from both the disciplinary width and depth of the students' research.

how the product's technical functions supported its operation. But with the representation from Figure 12 in their hands, the students became able to visually relate these two areas of expertise and assess how an alteration in one brought consequences to the other. The making of the representation in Figure 12 is thereby an example of how it has been possible to make recognitions produced through two different epistemic traditions – technical analysis and user studies – synthesize and speak across the barriers of each tradition. We will later return to discuss this cross-disciplinary transferability of certain visual representations and the competency deployed to master disciplines by producing representations that speak across what Carlile (2002) terms pragmatic knowledge boundaries. It is often said that a picture can say more than a thousand words. This certainly holds true regarding this representation.

Realizing such a comprehensive representation, which integrates different types of expertise and offers a visual interpretation of the identified problem, requires a long

process of observing, inscribing, and combining and refining inscriptions. These were key activities in developing what this redesign process accomplished: a visual account that represents an analysis encompassing diverse activities and disciplinary approaches. Exploring the work process of this team, we have discovered a visual synthesis, which – instead of dividing research and analysis activities – integrates them by inscribing visual accounts, collecting them, and combining them into new recognitions materialized as sketched representations.

Synthesis of Drawing Representations Together

As we saw in Figure 3, the students conduct their discussions around their representations. The students point to their representations while they speak to provide substance to their words and ideas. The students even take representations down from the bulletin boards, blackboards, or walls and place them on the table in the center of their work sessions to represent and discuss their current work, or they remove the representations when they become obsolete. The way that the students manage their representations is inseparable from how they realize their project. Following the development of the representations (Figures 4 to 12) produced by the students throughout their project, they introduced various inscriptions based on multiple observations. Some of these inscriptions were chosen by the students to be reproduced into later representations, whereas other inscriptions were not chosen. The students can thus be understood to have conducted a selection process through their decisions about which inscriptions to reproduce into new representations. An example of these decisions was seen in the normalization of representations (Figures 4 to 8) where the students' choices of viewing angle and presentation styles of the product were negotiated and settled. Throughout the project the students' thinking and decision making became materialized through their work with representations. When the students drew together representations of certain recognitions during their project, their visual synthesis linked their epistemic development with their decision making. Realizing thoughts as visual representations gives the thoughts a material presence that makes them shareable and enables them to support those recognitions that can build on them.

Developing and refining ways to represent thoughts and ideas are integral to the cognitive process in realizing a project. Although the process of materializing thoughts is cognitive, it is also rhetorical, since it helps engineers make stronger arguments in collaborataive decision making. We have observed representations to strengthen arguments and to be a central factor in mobilizing shared interest and recognition among the engineering students throughout their project. Seen in the perspective of Callon's four moments of translation (1986), it can be argued that representations work as what he terms *interessement devices*, which are used "to lock allies into place." In his perspective, interessement devices support the second moment of translation, interessement, which Callon describes as "actions by which an entity attempts to impose and stabilize the identity of other actors it defines through its problematization. Different devices are used to implement these actions" (Callon, 1986, p. 8).

Making a representation of an observation and a specific problem interpretation of it, as the students did, would be in line with Callon's thinking: to make an interessement device that is a materialized maneuver by which to negotiate interests with other actors.

In Callon's perspective, the action of materializing observations and ideas into representations is an act of negotiating interests. In this view, the team's work with

representations is inseparable from the team's negotiation of epistemic and decision-making interests. In the students' case, these negotiations proved to be materialized into new representations that were based on the prior recognitions and thus came to define the specific development of the project. Latour calls this "drawing things together," while Carlile emphasizes the knowledge processes that are facilitated by material entities in the presence of different perceptions. The key implication of combining these perspectives is to see representations as facilitators that realize both recognitions and negotiations through the synthesis of collecting and combining and refining diverse accounts in the project. We therefore argue that representations should be seen as the material facilitation of the synthesis process.

The ability to make representations becomes a key competence in making a specialized recognition able to travel and integrate in the synthesis. Recognizing the crucial roles of representations in design synthesis emphasizes the importance of training engineers to translate their expert knowledge outputs into representations that can integrate with other types of expertise. The selectivity of a certain disciplinary expertise produces certain types of inscriptions. Collecting representations with inscriptions from diverse disciplines and expertise can, as illustrated in the case of the students' project, transcend disciplinary boundaries. This crossing of disciplinary boundaries happens as the synthesis becomes a social process, materially collected on the shared surface of the wall, bulletin board, table, or blackboard. The selectivity becomes a dynamic social process when representations that are shared are combined into new and stronger representations that again are reproduced in new representations.

Transferability and Disciplinary Mastery

In the student design process, representation styles, content about usage, functionality, and technical aspects are extracted and synthesized together in the final drawing. The students' synthesis shows *how* representations carrying different types of inscriptions with different disciplinary origins can combine. The ability of representations to contain inscriptions from diverse disciplines shows that as knowledge objects they can achieve multidisciplinarity and integrate disciplines. This ability is crucial in attaining the degree of comprehensiveness in understanding the problem necessary for the project to produce and deal with novel recognitions across disciplinary competences.

If we examine the representations that were able to transcend the disciplinary competences (technical functionality analysis of the product's internal network and the ethnographic usability studies of the product's external network) through which their inscriptions were identified and became relevant and applicable across other disciplines, we can see the graphical manipulation and organization that made the discipline transcendence possible. From the analytical process represented in Figures 10, 11a and b, and 12, we see that the style of representation changes from a flat diagram illustrating the functional relations (Figure 10) to a spatial illustration of the internal parts supporting those functions in Figures 11a and b. These spatially placed inscriptions in Figures 11a and b are brought to life by a transformation of scale and viewing angle, which makes the spatial details combinable and synthesized as represented in Figure 12. This transformation of representations is an example of what Latour describes as mastery of immutable mobiles – when things are drawn together (1985).

Taking disciplinary boundaries into account, this process resembles the crucial transformation of knowledge described by Carlile (2002). Through these sketches we observe how

the eyes and hands think, as flat representations are transformed when they are made capable of being put side by side and then drawn together. The process illustrates the important competence to produce representations that can transcend disciplines; in this case, technical functional understanding of the product combined with an understanding of the product's usability that is produced as Figures 11a and b are drawn together into Figure 12.

This crucial competence to produce representations that are interdisciplinarily combinable appears to be the key to success in the case of Figure 12. In short, this competence is the ability to master the discipline through the ability to manipulate representations so that their inscriptions become combinable with inscriptions from other disciplines. We propose to call this competence *disciplinary mastery,* because the implications of disciplinary knowledge are first truly realized when brought to life through a multidisciplinary synthesis. Disciplinary mastery thus refers to the ability to make accounts that transcend the selectivity of the discipline itself and are recognizable and combinable with representations from other disciplines.

We propose to call the discipline-transcending ability of these representations *transferability,* which relates to Latour's notion of immutable mobiles by their being combinable, but it also emphasizes the multidisciplinary ability by their being transformed within other disciplines. Carlile conceptualizes this as the process of knowledge transformation, which for him is facilitated through a boundary object (2002). Henderson's notion of meta-indexicality is closely tied to the crucial and combining role of visual representations in multidisciplinary work. With regard to meta-indexicality, Henderson describes the ability of visual representations to "serve as a holy ground where codified and uncodified knowledge can meet, drawing on each other's strengths to bring together various levels of tacit knowledge, including but not limited to visual knowledge" (1999).

Our notion of transferability builds on the fundamental ability to speak across knowledge barriers and enable diverse types of recognitions to be combined – and then to reach the status of meta-indexicality. While the importance of the meta-indexicality of visual representations and knowledge transformation is at the very heart of multidisciplinary design, we wish to illuminate the process of creating such visual representations. Transferability is the fundamental ability of visual representations to enable a synthesis of drawing things together and thus gaining meta-indexicality.

If we reintroduce the Venn diagram of the three competences derived from the three different disciplines, which together make up the design and innovation program's curriculum from Figure 1, we can connect to it the notions of disciplinary mastery and representations of transferability to make Figure 13.

We argue that representations are the key to successfully integrating the three discipline-derived competences into the expertise that the D&I students develop. The Venn diagram helps to visualize how the activities of observing and producing representations through the collaborative process we call design synthesis enables recognitions to be formed as first derived from single disciplines and later integrated with other ones. As the design synthesis develops, new representations are combined from earlier representations. Representations with transferability can speak across these boundaries and make it possible to represent inscriptions from multiple disciplines as they are drawn together in new representations, a process illustrated in Figure 13. The representations (shown as rectangles) are at first formed through the respective disciplinary competences symbolized by grey ovals. New representations that combine and transcend disciplinary competences move towards the middle of the flower where the competences intersect.

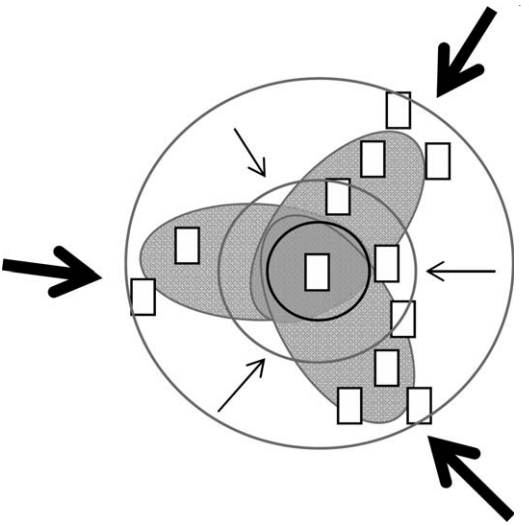

Figure 13 The synthesis of drawing of multidisciplinary representations together through succeeding stages. Starting from the periphery with disciplinary representations, multidisciplinary representations are produced through transferring inscriptions from other disciplines, illustrated by moving towards the middle.

When combined in the middle of the diagram, the representations produced through the different disciplinary competences achieve multidisciplinary transferability and generate the design synthesis we have observed in the students' project. The process of design synthesis is thus shown as moving towards the intersection where the disciplinary competences overlap. Moving the opposite way, away from the middle, purifies and detaches the disciplines and moves them further from each other. The circles represent stages of design synthesis, where the outermost peripheral circle indicates an initial stage with pure disciplinary representations. Moving towards the middle, synthesis is realized stepwise as new representations build on the prior ones and become more transferable. This process ends up leading to multidisciplinary combinations forming novel and refined recognitions at the center of the figure.

Epistemology of Design Synthesis

To summarize, we propose that design synthesis is a socio-material process of observing and inscribing extracted recognitions from those observations, and collecting and combining these recognitions into new recognitions by drawing them together. We propose an epistemology of design synthesis that consists of four types of distributed cognitive processes, often performed simultaneously, although each type builds on the previous one(s): (1) exploration – performing multidisciplinary observations, e.g., technical and usability studies; (2) inscribing – inscribing observations by interpreting and preserving them; (3) collecting – compiling the preserved observations into a whole; and (4) combining and refining – making new recognitions from the recognitions made in the preceding stages.

Exploration

Exploration covers the type of activities that connect the observer with the objects under exploration. Explorative activities are empirical and produce observations, such as when scientists in their laboratory watch a bio-chemical reaction under a microscope, or when a field engineer conducts firsthand observations of a machine installation under operation. The students initiated their project by conducting a field study and user observations. Exploration covers a multitude of empirical approaches and observation activities. In the design studio, the students dismantled the product and made observations that were very different from their user observations. Exploration is part of the empirical activities that produce a variety of observation-based recognitions.

Inscribing

Inscribing covers activities that materialize observations. The activities that inscribe recognitions extracted from observations, in order to preserve them as representations, are central to making the recognitions useful in the collective design process. Inscribing individual recognitions when making them into representations translates individual cognition into collective recognition. Making observations that can travel and be combined as representations is the key to how the students realize their project. Inscribing is highly dependent on the expertise and skills of the individual, what we call the disciplinary trained competences of that individual. The individual expertise to conduct observations, interpret them, and turn them into representations that are accessible for others is important. Inscribing depends on individual selectivity, and the competence to transform skills and expertise into representations is crucial. In some cases, representations are made by more than one person, which means that the process of inscribing observations can be a social activity that already becomes collective recognition in the making. The knowledge processes in collectively producing a representation fit well with Carlile's concept of knowledge transformation, and emphasizes the boundary-object status of representations in design synthesis. Representations can thus work as boundary objects during their development and use when they facilitate knowledge transfer as they are recognized, discussed, and reproduced by others.

Collecting

Through being collected, representations become collective artifacts within the design team. The students collate their worksheets in their studio as they produce them. The different inscriptions that the representations carry appear next to each other for anyone present to assess. Here the design process becomes a social process and a more comprehensive picture of the design object takes form. This comprehensiveness of recognitions made possible by collecting and sharing inscriptions creates the foundation for new thoughts and ideas that build on the preceding ones.

Combining and Refining

Combining and refining refers to activities that build new recognitions based on existing recognitions. What has been realized through the process of collecting representations, feeds the combining and refining so that the epistemic process of building on the past is realized. The process of combining existing recognitions becomes a process of collective selectivity. The formation of new representations selects from what is already produced and re-produces the inscriptions that support their purpose. The process of combining and refining can thus be partially understood as a repetition of exploration and inscribing,

with also having an initial set of pre-made inscriptions as the basis for observation. Inscriptions with different disciplinary and expertise origins can merge into new and more comprehensive representations. As seen in the students' project, technical understanding can be merged with user and contextual understanding as they draw inscriptions together. The outcome of combining and refining is a new recognition realized as a new inscription. Existing knowledge is transformed into new knowledge, and the crucial key lies in how plural accounts and disciplinary approaches are synthesized.

Implications

Our analysis of the student's use of representations throughout their project suggests engineering design practice can benefit in three areas.

Synthesis-Oriented Teaching

For educational practice we offer three recommendations for course design, educational activities, and inclusion of the physical surroundings in educational activities.

Integrate content from more than one course in synthesis-oriented design courses. In design courses, the students should discover how to apply selected content, methods, and theories according to their appointed task. This discovery can be achieved by designing courses in which the students integrate theories, methods, and tools from different types of disciplinary expertise into combined solutions. Design-based courses should make use of the four epistemic processes to explore, inscribe, collect, and combine and refine different recognitions throughout the design process.

Integrate visualization activities in the courses so students produce visual representations of the content, methods, problems, and theories that they deploy. The visualization activities must improve the students' conceptual recognition of the disciplinary content in ways that make it more transferrable. This applies to all type of courses, both traditional disciplinary and design-based courses.

Utilize the surroundings to post visual representations on walls. Make the students share their recognitions and build on their shared visual representations so that they improve both their understanding of the sharing process and the content they share. The design engineering students use the walls and pin-up boards that surround them in their studio to gather and display their representations throughout the design courses.

Synthesis-Oriented Design Approach

For design practice to become more synthesis oriented, we offer three ways to think about disciplinary inclusion, collaborative working routines, and inclusion of the physical surroundings in collaborative work.

Integrate more than one discipline as early as possible in the design process. Encourage participants to produce visual representations of their observations, assessments, and ideas so that they can be shared. Encourage cross-disciplinary approaches to relate disciplinary derived recognitions to other disciplines. The production of representations that can better relate and interest across disciplines will promote better integration of disciplinary approaches. Supporting production of representations with better transferability to other disciplines will promote better collective recognition and impact.

Assure good knowledge-sharing routines. Support knowledge based on synthesis epistemology by emphasizing the importance of exploration, inscribing, collecting, and combining

and refining. Recognizing and utilizing these distinctive processes will foster an improved design synthesis, especially if re-run several times as a cycle. This design synthesis could be approached through incentives to build on prior recognitions in the design process when producing new representations, especially if the recognitions are from other disciplines.

Facilitate a design studio. A shared and accessible surface on which participants can collect and share representations throughout the design process is of great importance in materially supporting synthesis in a design process.

Engineering Education Research

Our findings have five implications for engineering education research.

The roles of representations need to be understood as central to both learning and communicating results. Representations are integral to cognition, and it is important to understand them for improving methods in engineering education research.

The proposed epistemology of design synthesis can be applied to understand progress in both professional and educational design processes. The four epistemological steps provide a better understanding from which to choose research activities, methods, and documentation styles.

Focus on how observations are materialized and what kind of results different disciplines produce. Much can be learned from how different disciplines, educations, and professions produce and use documentation as part of their practices.

Learn how transdisciplinary representations are produced and combined into new recognitions. It is essential to understand how engineering-scientific results can become more applicable in settings outside engineering schools.

Preserve documentation. Documentation made by students can, if preserved throughout their projects, be used to study what and how the students learn.

Conclusion

By examining the redesign practice of the engineering students, we have found that representations play a central role in their education. Our analysis shows how the design process develops as it is substantiated through representations that express the recognitions made through the design process. We have shown new recognitions are synthesized from existing ones, thus making it possible to comprehend diverse disciplinary recognitions into uniform representations materialized as representations.

The engineering students drew representations that enabled them to share their observations with each other and then gain feedback and appreciation. They produced and reproduced representations of their recognitions based on their observations and thereby built a more comprehensive understanding of their product. This process enables ideas about how to improve the product to emerge as new combinations of representations. Certain aspects of the students' observations seem to have been reproduced more than others, and the representational style of these aspects also appears to stabilize as the design evolves. Representations capture and preserve the evolving stages of recognition throughout the process. The representations play a central role in simultaneously relating epistemic progress and decision making.

The visual representations are then materializations of recognitions and provide both physical and mental presence in the design process. Representations thereby not only facilitate knowledge transfer, but also facilitate the actual synthesis by which the design process is realized.

Our research and analysis show that learning to draw observations together and then sharing them in teams promotes a visual synthesis that is very important in engineering design. Visual synthesis can facilitate the documentation and collection of knowledge from both the ethnographic use studies and the more technical analysis activities. Visual synthesizing thus becomes the key to combining diverse recognitions in design.

By exploring a specific design process of engineering students, we have discovered a visual synthesis that integrates instead of divides research and analysis activities. By inscribing recognitions as drawings, collecting them, and combining and refining them into new recognitions, the synthesis also integrates diverse disciplinary competences in design. By using the concepts of inscriptions, immutable mobiles, meta-indexicality, and boundary objects, the analysis shows how particular representations, collected on a flat surface, materialize and synthesize observations, thoughts, and reflections. We propose the concept of disciplinary mastery as a useful notion of the crucial competency to transcend disciplinary boundaries by producing representations with the key capability that we call transferability. Transferability is the ability of visual representations to relate across disciplines; thus, it is what enables a discipline-integrating synthesis of drawing things together, which is central for design. Our exploration achieves a better understanding of how the difficult task of integrating different disciplines can be realized in design practice.

Finally, we propose that more attention should be given to visual representations in engineering education research because we see great potential in assessing the intermediate accounts made by students when they approach problems and designs solutions.

References

Bijker, W. (1995). *Of bicycles, bakelites, and bulbs: Toward a theory of sociotechnical change*. Cambridge, MA: MIT Press.

Boelskifte, P., Brodersen, S., Jørgensen, U., & Lindegaard, H. (2011). Foundations for a new type of design-engineers – Experiences from DTU. *Proceedings of the 18th International Conference on Engineering Design, Lyngby, Denmark*.

Bucciarelli, L. L. (1994). *Designing engineers*. Cambridge, MA: MIT Press.

Callon, M. (1986) Some elements of a sociology of translation: Domestication of the scallops and the fishermen of the St Brieuc Bay. In J. Law (Ed.), *Power, action and belief: A new sociology of knowledge?* (pp. 186–223). London: Routledge.

Carlile, P. R. (2002). A pragmatic view of knowledge and boundaries: Boundary objects in new product development. *INFORMS*, *13*(4), 442–455.

Case, J. M., & Light, G. (2011). Emerging methodologies in engineering education research. *Journal of Engineering Education*, *100*(1), 186–210.

Eisenstein, E. (1979). *The printing press as an agent of change*. Cambridge, UK: Cambridge University Press.

Greeno, J., Collins, A., & Resnick, L. (1996). Cognition and learning. In R. Calfee & D. Berliner (Eds.), *Handbook of educational psychology* (pp. 15–46). New York, NY: Macmillan.

Hansen, C. T. (1999). Identification of design work patterns by retrospective analysis of work sheets. *Proceedings of the 12th International Conference on Engineering Design (ICED 99)* (pp. 775–780). München, Germany: Technische Universität München.

Hansen, C. T. (2000). The engineering designer's perception of work sheets. *Proceedings of the 2nd International Conference of Industrial Engineering* (pp. 53–56). Tallinn, Estonia: Tallinn Technical University.

Henderson, K. (1991) Flexible sketches and inflexible data bases: Visual communication, conscription devices, and boundary objects in design engineering. *Science, Technology & Human Values*, *16*(4), 448–473.

Henderson, K. (1995) The political career of a prototype: Visual representation in design engineering, *Social Problems*, *42*, 274–299.

Henderson, K. (1999). *On line and on paper: Visual representations, visual culture, and computer graphics in design engineering*. Cambridge, MA: MIT Press.

Hutchins, E. (1995). *Cognition in the wild*. Cambridge, MA: MIT Press.

Johri. A., & Olds, B. M. (2011). Situated engineering learning: Bridging engineering education research and the learning sciences. *Journal of Engineering Education*, *100*(1), 151–185.

Johri, A., & Lohani, V. K. (2011). Framework for improving engineering representational literacy by using pen-based computing. *International Journal of Engineering Education*, *27*(5), 958–967.

Jørgensen, U., & Valderrama, A. (2012). Entrepreneurship and response strategies to challenges in engineering and design education. *International Journal of Engineering Education*, *28*(1), 407–415.

Kline, R. (1994). World War II: A watershed in electrical engineering education. *IEEE Technology and Society Magazine*, *13*(2), 17–23.

Latour, B. (1985). Visualization and cognition: Drawing things together. *Culture Technique 14*, 1–32.

Latour, B. (1986). The powers of association. In J. Law (Ed.), *Power, action and belief: A new sociology of knowledge?* (pp. 264–280). London: Routledge & Kegan Paul.

Latour, B. (1987). *Science in action*. Cambridge, MA: Harvard University Press.

Latour, B. (1988). The politics of explanation: An alternative. In S. Woolgar (Ed.), *Knowledge and reflexivity: New frontiers in the sociology of knowledge* (pp. 155–177). London: Sage Publications.

Latour, B. (1999). *Pandora's hope. An essay on the reality of science studies*. Cambridge, MA: Harvard University Press.

Latour, B., & Woolgar, S. (1979) *Laboratory life: The social construction of scientific facts*. Beverly Hills, CA: Sage Publications, Inc.

Law, J. (1992). Notes on the theory of actor-network: Ordering, strategy and heterogeneity. *Systems Practice*, *5*, 379–93.

Lemke, J. L. (1998). Multiplying meaning: Visual and verbal semiotics in scientific text. In J. R. Martin & R. Veel (Eds.), *Reading Science* (pp. 87–113). London: Routledge.

Mehalik, M., & Schunn, C. D. (2006). What constitutes good design? A review of empirical studies of the design process. *International Journal of Engineering Education*, *22*(3), 519–532.

Pea, R., & Collins, A. (2008). Learning how to do science education: Four waves of reform. In Y. Kali, M. C. Linn, & J. E. Roseman (Eds.), *Designing coherent science education* (pp. 3–12). New York: Teachers College Press.

Schön, D. A. (1987). *Educating the reflective practitioner*. San Francisco, CA: Jossey-Bass.

Seely, B. (2000). The 'imbalance' of theory and practice in American engineering education: Reforms and changes, 1920–1980. *ICON*, *5*,41–63.

Smith, M. R., & Marx, L. (Eds.) (1994). *Does technology drive history? The dilemma of technological determinism*. Cambridge, MA: MIT Press.

Star, S. L. (1989). The structure of ill-structured solutions: Boundary objects and heterogenous distributed problem solving. In M. Huhns & L. Gasser (Eds.), *Reading in distributed artificial intelligence*. Menlo Park, CA: Morgan Kaufman.

Star, S. L., & Griesemer, J. R. (1989). Institutional ecology, 'translations' and boundary objects: Amateurs and professionals in Berkeley's museum of vertebrate zoology 1907–39. *Social Studies of Science*, *19*(3), 387–420.

Suthers, D., & Hundhausen, C. (2001). Learning by constructing collaborative representations: An empirical comparison of three alternatives. *Proceedings from EuroCSCL 2001, Maastricht*.

Authors

Joakim Juhl, design engineer, is a doctoral student at the Centre for Design, Innovation and Sustainable Transition at Aalborg University, Copenhagen, A.C. Meyers Vænge 15, 2450 Copenhagen, Denmark; jjuh@plan.aau.dk.

Hanne Lindegaard, Ph.D., ethnologist, is an associate professor at the Centre for Design, Innovation and Sustainable Transition at Aalborg University, Copenhagen, A.C. Meyers Vænge 15, 2450 Copenhagen, Denmark; Hannelin@plan.aau.dk.